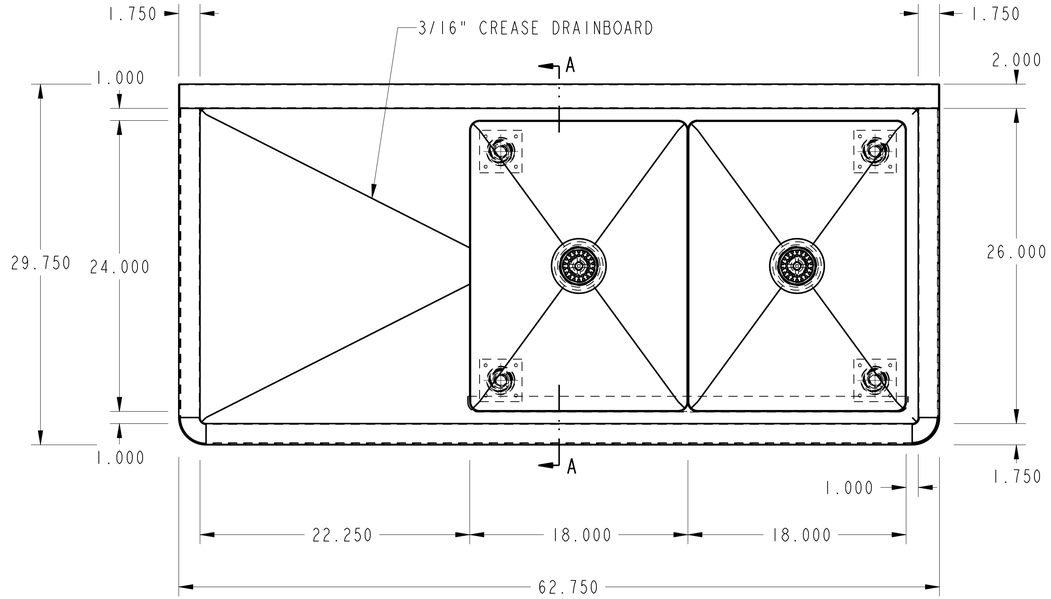


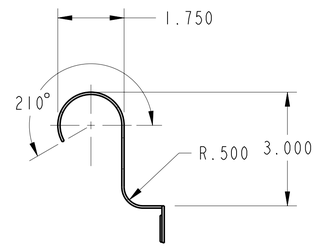


SECTION A-A
SCALE 0.500

| PURCHASED ITEMS | | | | | | | |
|---|---|---|---|---|---|---|---|
| KEY | DESCRIPTION | QTY. | U/M | INV. CODE | VENDOR NAME | PART/MODEL NUMBER | PART TYPE |
| 1 | DUO BASKET DRAIN, E38-1010 | 2 | EA | B1 | COMPONENT | E38-1010 | ASSEMBLY |
| 2 | LEG GUSSET | 4 | EA | B1 | COMPONENT | A18-0406 | PART |
| 3 | S/S ADJUSTABLE BULLET FOOT | 4 | EA | B1 | COMPONENT | A10-0851 | PART |

TOP: 16 GA. STN/STL ALL WELDED CONSTRUCTION w/ INTEGRAL 10" BACK. ALL HORIZONTAL AND VERTICAL CORNERS TO BE COVED TO A 1/2" RADIUS. SINKS TO BE WELDED INTEGRAL AS SHOWN.

SINKS: 16 GA. STN/STL ALL WELDED CONSTRUCTION. ALL INTERIOR CORNERS TO BE COVED TO A 3/4" RAD. WITH SPHERICAL INTERSECTIONS.

LEGS: 1 5/8" O.D. 16 GA. STN/STL TUBING HELD IN STN/STL LEG HOLDERS WHICH ARE FULLY WELDED TO REINFORCING PLATE ON UNDER SIDE OF SINK BOWLS.

FEET: STN/STL ADJUSTABLE BULLET TYPE.

NOTES: ALL STN/STL TO BE TYPE 300 SERIES.
ALL STN/STL TO BE POLISHED TO A NO. 5 FINISH.
ALL UNEXPOSED WELDS TO BE COVERED w/ ALUMINUM PAINT.
ALL METAL EDGES AND CORNERS TO BE FILED SMOOTH.

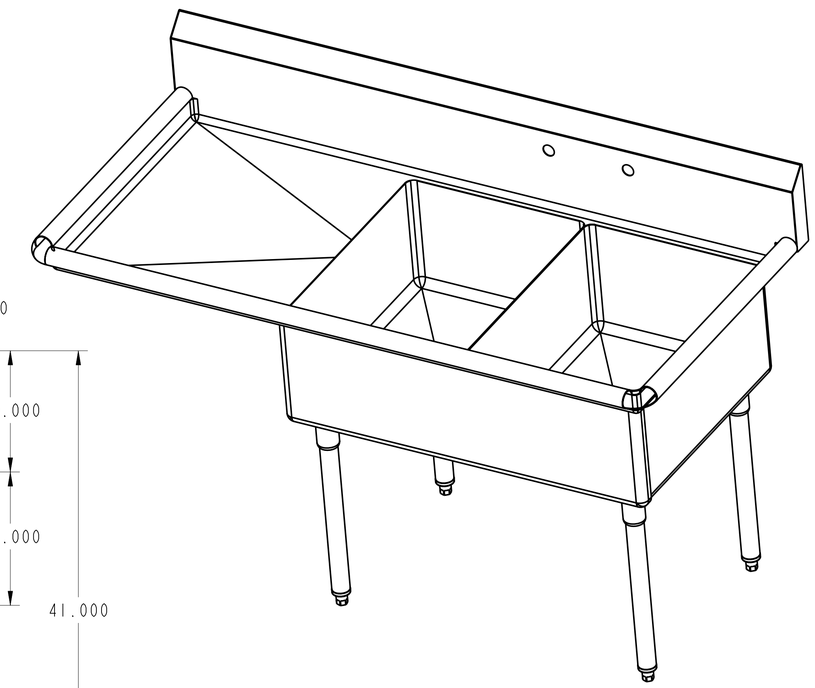

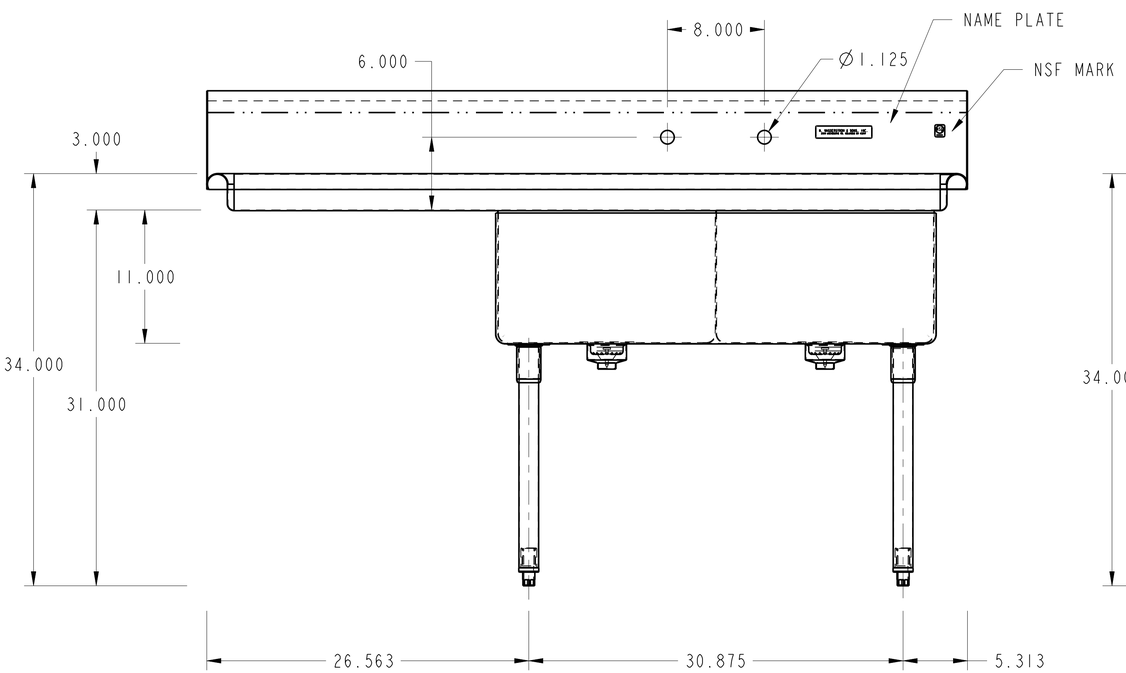


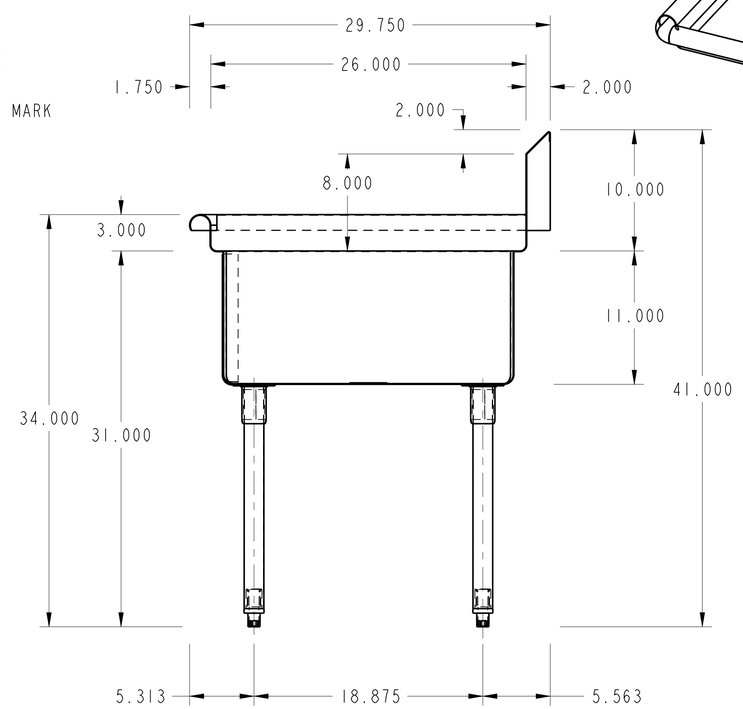


SECTION A-A

| | |
|---|---|
| LOCATION | |
| DEPARTMENT | |
| ITEM # | |
| QUANTITY | |

| NO. | DATE | | BY |
|---|---|---|---|
| | | | |

REVISIONS

| ASSEM | C-2-1824-24L |
|---|---|

NSF PRO

THIS DRAWING IS THE PROPERTY OF AMTEKCO INDUSTRIES INC., AND IS TO REMAIN IN THE POSSESSION OF OUR REPRESENTATIVE UNLESS PERMISSION IS GIVEN BY AMTEKCO INDUSTRIES INC., AND MUST BE RETURNED WHEN REQUESTED.

AMTEKCO INDUSTRIES, INC.
MANUFACTURERS OF QUALITY PRODUCTS FOR THE FOOD MARKETING INDUSTRY
1675 S. HIGH ST. COLUMBUS,OHIO 43207
(614)228-6590 Fax (614)443-4807

AMTEKCO

62 3/4" x 29 3/4" x 34" 2 COMP. SINK

| APPROVED BY | CKD BY | DATE 11-Aug-06 | SCALE 0.160 |
|---|---|---|---|
| | | DRAWN BY BALAJI | 1 of 1 |
| DATE | CODE | DRAWING No. C-2-1824-24L | REV. / PART/SHEET |