PURCHASED ITEMS

KEY	DESCRIPTION	QTY.	U/M	INV. CODE	VENDOR NAME	PART/MODEL NUMBER	PART TYPE
1	FLUSH MOUNT WALL BRACKET	3	EA	B1	AMTECKO	AMT7976P001	PART
2	FAUCET	1	EA	B1	COMPONENT	KN54-8012	PART
3	LEG GUSSET	4	EA	B1	COMPONENT	A18-0406	PART
4	S/S ADJUSTABLE BULLET FOOT	4	EA	B1	COMPONENT	A10-0851	PART
5	LA WASTE NO OVERFLOW, FLAT STRAINER	3	EA	B1	COMPONENT	D50-7200	PART

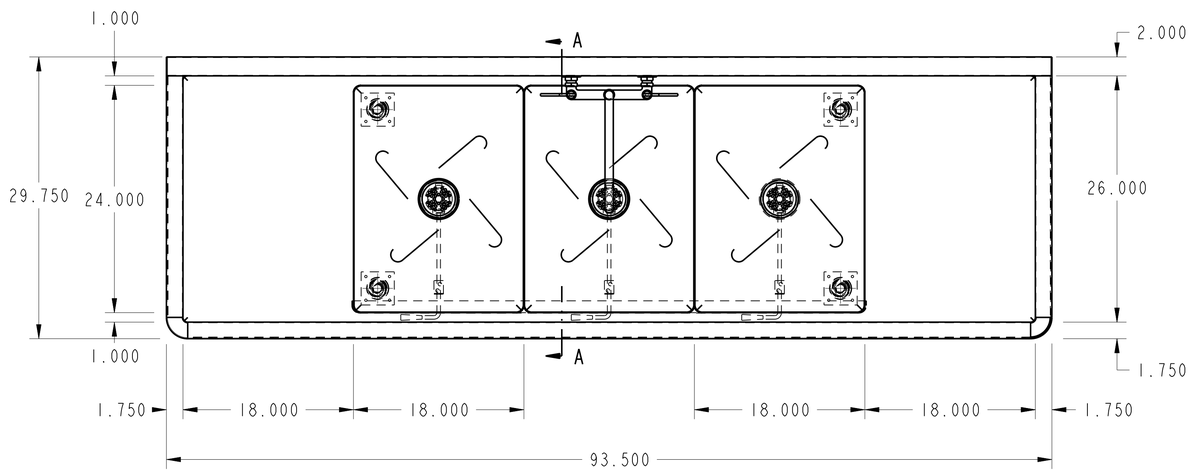

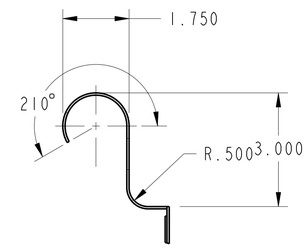

SECTION A-A
SCALE 0.500

TOP: 16 GA. STN/STL ALL WELDED CONSTRUCTION w/ INTEGRAL 10" BACK & RIGHT SIDE SPLASH. ALL HORIZONTAL AND VERTICAL CORNERS TO BE COVED TO A 1/2" RADIUS. SINKS TO BE WELDED INTEGRAL AS SHOWN.

SINKS: 16 GA. STN/STL ALL WELDED CONSTRUCTION. ALL INTERIOR CORNERS TO BE COVED TO A 3/4" RAD. WITH SPHERICAL INTERSECTIONS. BOTTOM TO BE CREASE TO OPENING FOR CRUMB CUP WASTE AS SHOWN.

LEGS: 1 5/8" O.D. 16 GA. STN/STL TUBING HELD IN STN/STL LEG HOLDERS WHICH ARE FULLY WELDED TO REINFORCING PLATE ON UNDER SIDE OF SINK BOWLS.

FEET: STN/STL ADJUSTABLE BULLET TYPE.

NOTES: ALL STN/STL TO BE TYPE 300 SERIES.
ALL STN/STL TO BE POLISHED TO A NO. 5 FINISH.
ALL UNEXPOSED WELDS TO BE COVERED w/ ALUMINUM PAINT.
ALL METAL EDGES AND CORNERS TO BE FILED SMOOTH.

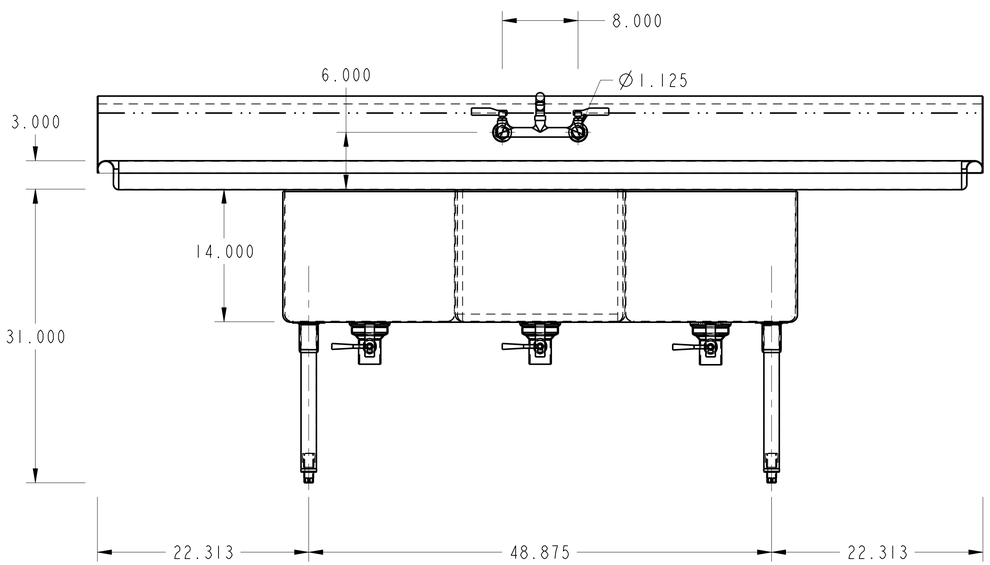

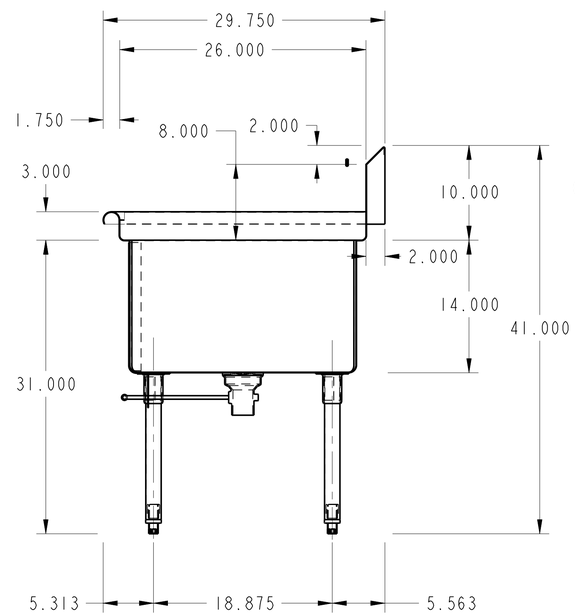

SECTION A-A

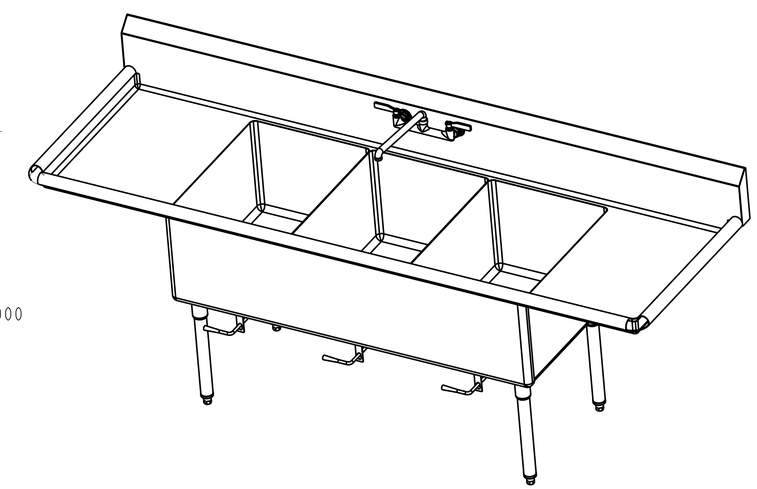

NO.	DATE		BY

REVISIONS

ASSEM	C3-1824-18D

LOCATION	
DEPARTMENT	
ITEM #	
QUANTITY	

THIS DRAWING IS THE PROPERTY OF AMTEKCO INDUSTRIES INC., AND IS TO REMAIN IN THE POSSESSION OF OUR REPRESENTATIVE UNLESS PERMISSION IS GIVEN BY AMTEKCO INDUSTRIES INC., AND MUST BE RETURNED WHEN REQUESTED.

AMTEKCO INDUSTRIES, INC.
MANUFACTURERS OF QUALITY PRODUCTS FOR THE FOOD MARKETING INDUSTRY
1675 S. HIGH ST. COLUMBUS,OHIO 43207
(614)228-6590 Fax (614)443-4807

AMTEKCO INSUSTRIES INC.

C-3-1824-18D (29 3/4" X 93 1/2" 3 COMP. SINK)

APPROVED BY	CKD BY	DATE 28-Jun-06	SCALE 0.125
		DRAWN BY JAB	1 of 1
DATE	CODE	DRAWING No. C3-1824-18D	REV. / PART/SHEET