PURCHASED ITEMS

KEY	DESCRIPTION	QTY.	U/M	INV. CODE	VENDOR NAME	PART/MODEL NUMBER	PART TYPE
1	DUO BASKET DRAIN, E38-1010	3	EA	BI	COMPONENT	E38-1010	ASSEMBLY
2	LEG GUSSET PLATE	4	EA	BI	COMPONENT	A18-0406	PART
3	S/S ADJUSTABLE BULLET FOOT	4	EA	BI	COMPONENT	A10-0851	PART

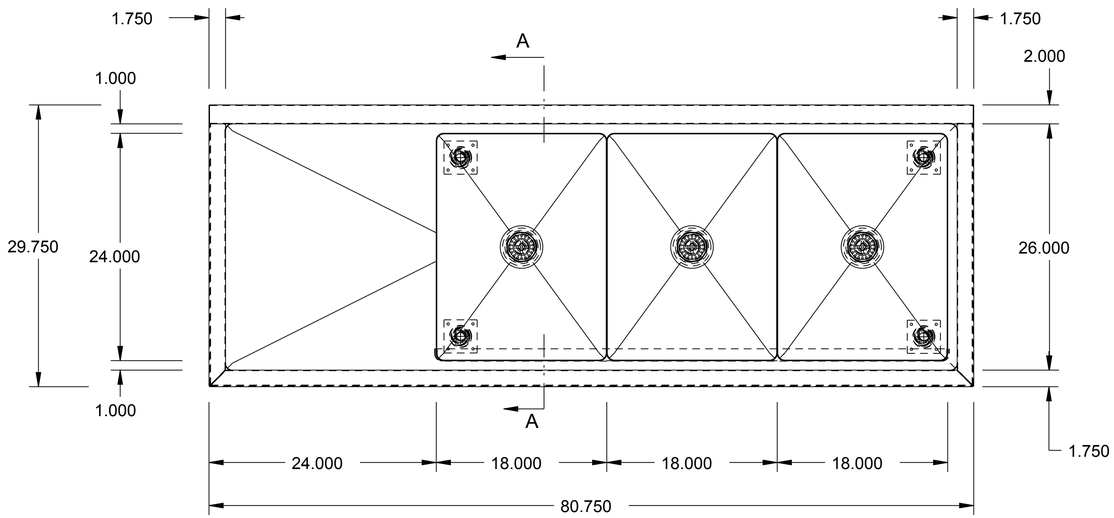

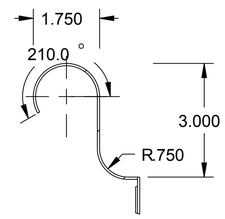

SECTION A-A
SCALE 0.500

TOP: 16 GA. STN/STL ALL WELDED CONSTRUCTION w/ INTEGRAL 10" BACK & RIGHT SIDE SPLASH. ALL HORIZONTAL AND VERTICAL CORNERS TO BE COVERED TO A 3/4" RADIUS. SINKS TO BE WELDED INTEGRAL AS SHOWN.

SINKS: 16 GA. STN/STL ALL WELDED CONSTRUCTION. ALL INTERIOR CORNERS TO BE COVERED TO A 3/4" RAD. WITH SPHERICAL INTERSECTIONS. BOTTOM TO BE CREASE TO OPENING FOR CRUMB CUP WASTE AS SHOWN.

LEGS: 1 5/8" O.D. 16 GA. STN/STL TUBING HELD IN STN/STL LEG HOLDERS WHICH ARESTUD BOLT TO REINFORCING PLATE ON UNDER SIDE OF SINK BOWLS.

FEET: STN/STL ADJUSTABLE BULLET TYPE.

NOTES: ALL STN/STL TO BE TYPE 300 SERIES.
ALL STN/STL TO BE POLISHED TO A NO. 3 FINISH.
ALL UNEXPOSED WELDS TO BE COVERED w/ ALUMINUM PAINT.
ALL METAL EDGES AND CORNERS TO BE FILED SMOOTH.

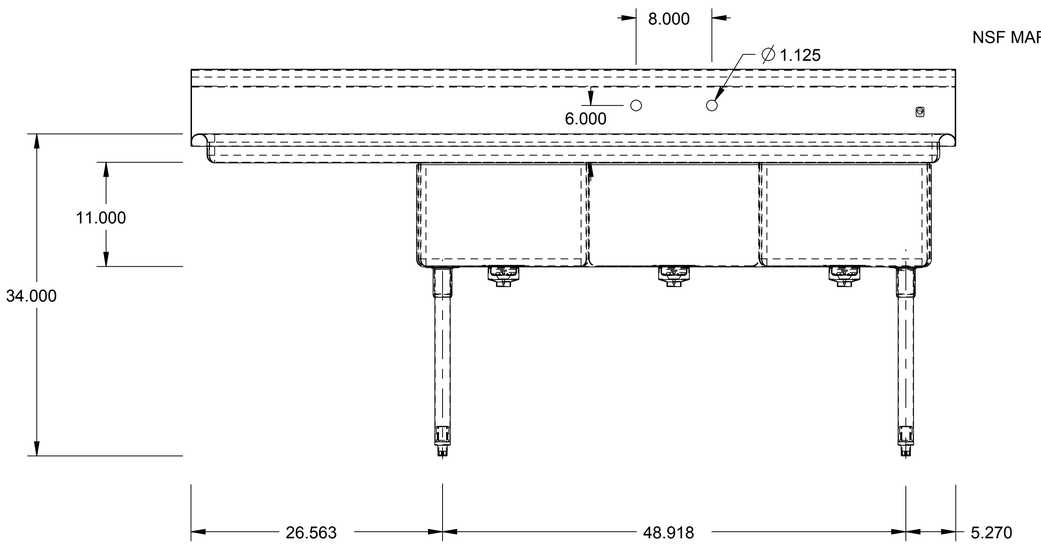

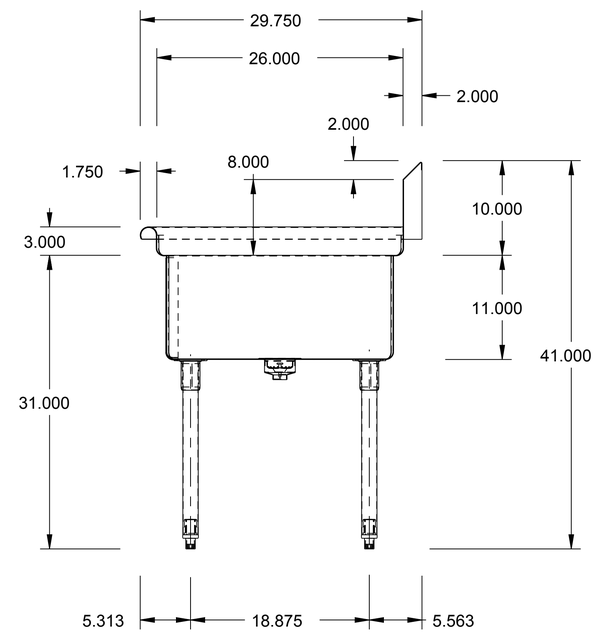

SECTION A-A

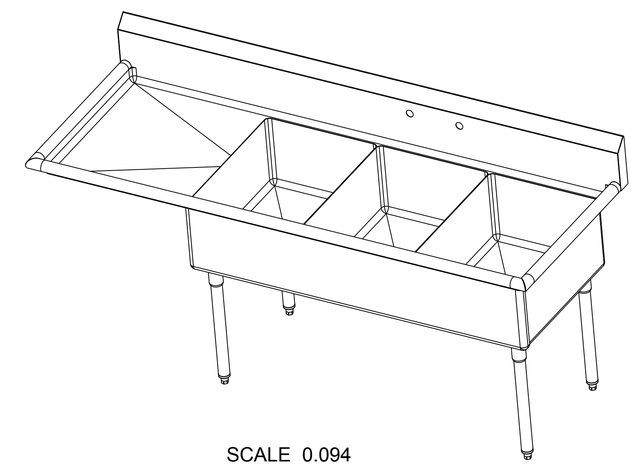

SCALE 0.094

NO.	DATE	REVISIONS	BY

ASSEM	C-3-1824-24L

NSF PRO

THIS DRAWING IS THE PROPERTY OF AMTEKCO INDUSTRIES INC., AND IS TO REMAIN IN THE POSSESSION OF OUR REPRESENTATIVE UNLESS PERMISSION IS GIVEN BY AMTEKCO INDUSTRIES INC., AND MUST BE RETURNED WHEN REQUESTED.

AMTEKCO INDUSTRIES, INC.
MANUFACTURERS OF QUALITY PRODUCTS FOR THE FOOD MARKETING INDUSTRY
1205 REFUGEE ROAD COLUMBUS,OHIO 43207
(614)228-6590 Fax (614)737-8016

AMTEKCO

80 3/4" x 29 3/4" x 34" 3 COMP. SINK

APPROVED BY	CKD BY	DATE 29-Aug-06	SCALE 0.125
DATE	CODE	DRAWN BY MICKLE	1 of 1
		DRAWING No. C-3-1824-24L	REV. / PART/SHEET