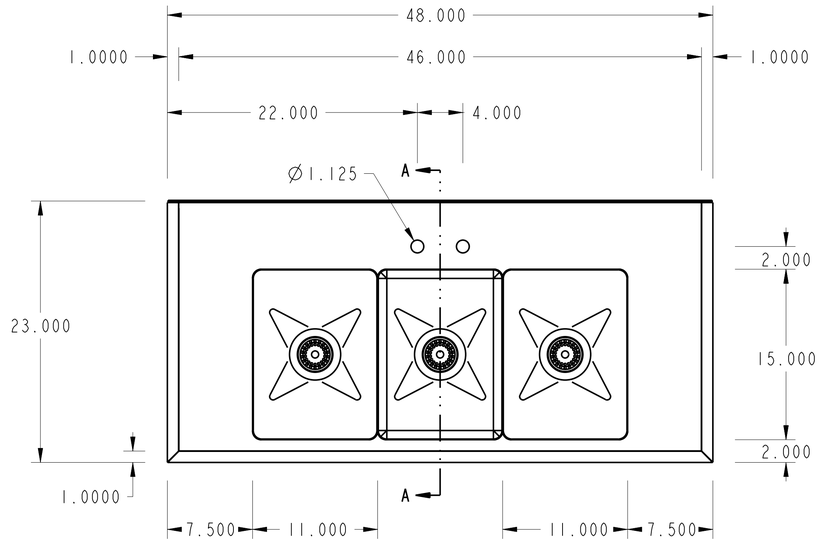

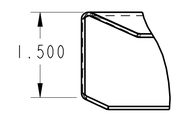

SPL MARINE EDGE
DETAIL A
SCALE 0.750

PURCHASED ITEMS

KEY	DESCRIPTION	QTY.	U/M	INV. CODE	VENDOR NAME	PART/MODEL NUMBER	PART TYPE
1	DUO BASKET DRAIN, E38-1010	3	EA	B1	COMPONENT	E38-1010	ASSEMBLY
2	FAUCET	1	EA	B0	COMPONENT	K11-4012_B0	PART
3	LEG GUSSET	4	EA	B1	COMPONENT	A18-0406	PART
4	S/S ADJUSTABLE BULLET FOOT	4	EA	B1	COMPONENT	A10-0851	PART

TOP: 16 GA. STN/STL ALL WELDED CONSTRUCTION w/ INTEGRAL 4 7/8" BACKSPLASH. ALL HORIZONTAL AND VERTICAL CORNERS TO BE COVERED TO A 1/2" RADIUS. SINKS TO BE WELDED INTEGRAL AS SHOWN.

SINKS: 16 GA. STN/STL ALL WELDED CONSTRUCTION. ALL INTERIOR CORNERS TO BE COVERED TO A 3/4" RAD. WITH SPHERICAL INTERSECTIONS. BOTTOM TO BE CREASE TO OPENING FOR LEVER ACTION WASTE AS SHOWN.

UNDERSHELF: 18 GA. STN/STL FULLY WELDED TO LEGS

LEGS: 1 5/8" O.D. 16 GA. STN/STL TUBING HELD IN STN/STL LEG HOLDERS WHICH ARE FULLY WELDED TO REINFORCING PLATE ON UNDER SIDE OF SINK BOWLS.

FEET: STN/STL ADJUSTABLE BULLET TYPE.

NOTES: ALL STN/STL TO BE TYPE 304.
ALL STN/STL TO BE POLISHED TO A NO. 5 FINISH.
ALL UNEXPOSED WELDS TO BE COVERED w/ ALUMINUM PAINT.
ALL METAL EDGES AND CORNERS TO BE FILED SMOOTH.

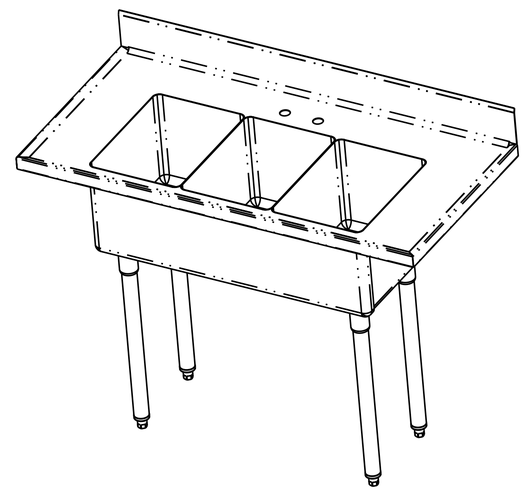

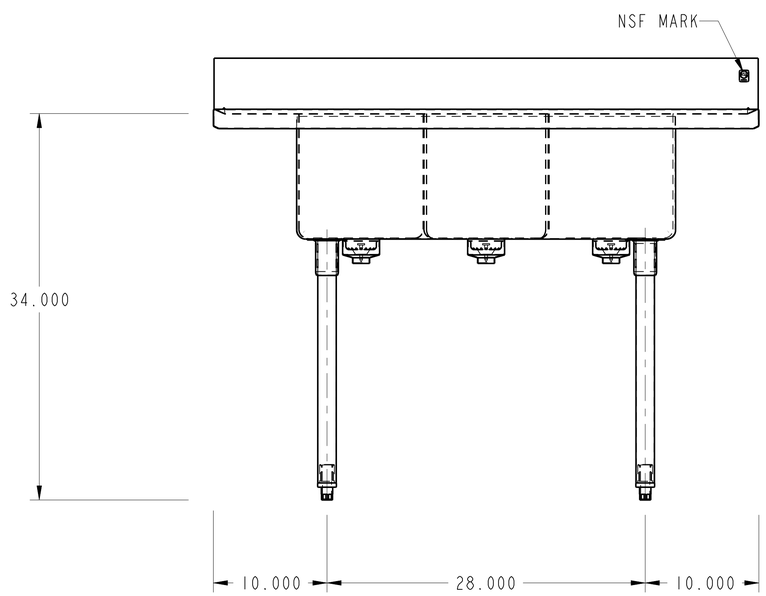

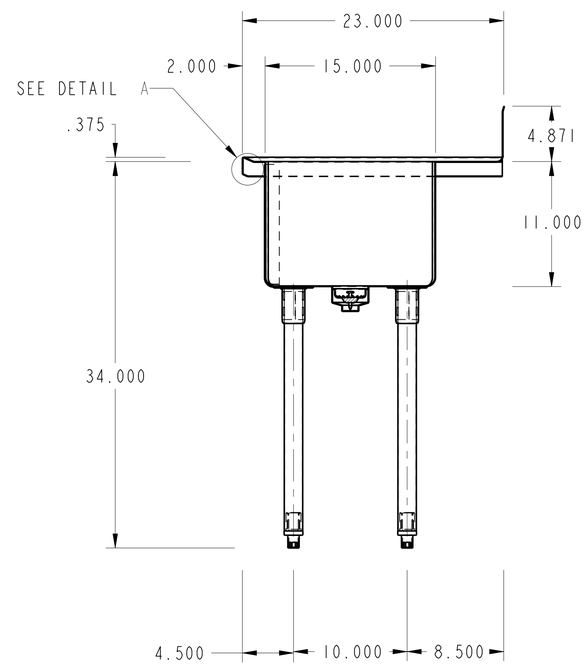

SECTION A-A

NO.	DATE		BY

REVISIONS

ASSEM	CSMS-48

THIS DRAWING IS THE PROPERTY OF AMTEKCO INDUSTRIES INC., AND IS TO REMAIN IN THE POSSESSION OF OUR REPRESENTATIVE UNLESS PERMISSION IS GIVEN BY AMTEKCO INDUSTRIES INC., AND MUST BE RETURNED WHEN REQUESTED.

AMTEKCO INDUSTRIES, INC.
MANUFACTURERS OF QUALITY PRODUCTS FOR THE FOOD MARKETING INDUSTRY
1205 REFUGEE ROAD COLUMBUS,OHIO 43207
(614)228-6590 Fax (614)737-8016

AMTEKCO

48" X 23" 3 COMP.SINK

APPROVED BY	CKD BY	DATE 04-Sep-06	SCALE 0.150
		DRAWN BY GANESH	1 of 1
DATE	CODE	DRAWING No. CSMS-48	REV. / PART/SHEET