PURCHASED ITEMS

KEY	DESCRIPTION	QTY.	U/M	INV. CODE	VENDOR NAME	PART/MODEL NUMBER	PART TYPE
1	1/4"-20 HEX NUT SS W/PLASTIC	4	EA	B1	MISC	250-20_HEXNUT	PART
2	1/4"-20 X 1 1/2" STUD BOLT	4	EA	B1	MISC	1_4-20_STUD	PART

DROP IN: 16 GA. STN/STL ALL WELDED CONSTRUCTION w/ INTEGRAL SINK. ALL HORIZONTAL AND VERTICAL CORNERS TO BE A 3/4" RADIUS.CREASE DRAIN BOARD (3/16")

NOTES:
ALL STN/STL TO BE TYPE 300 SERIES.
ALL STN/STL TO BE POLISHED TO A NO. 3 FINISH.
ALL UNEXPOSED WELDS TO BE COVERED w/ ALUMINUM PAINT.
ALL METAL EDGES AND CORNERS TO BE FILED SMOOTH.

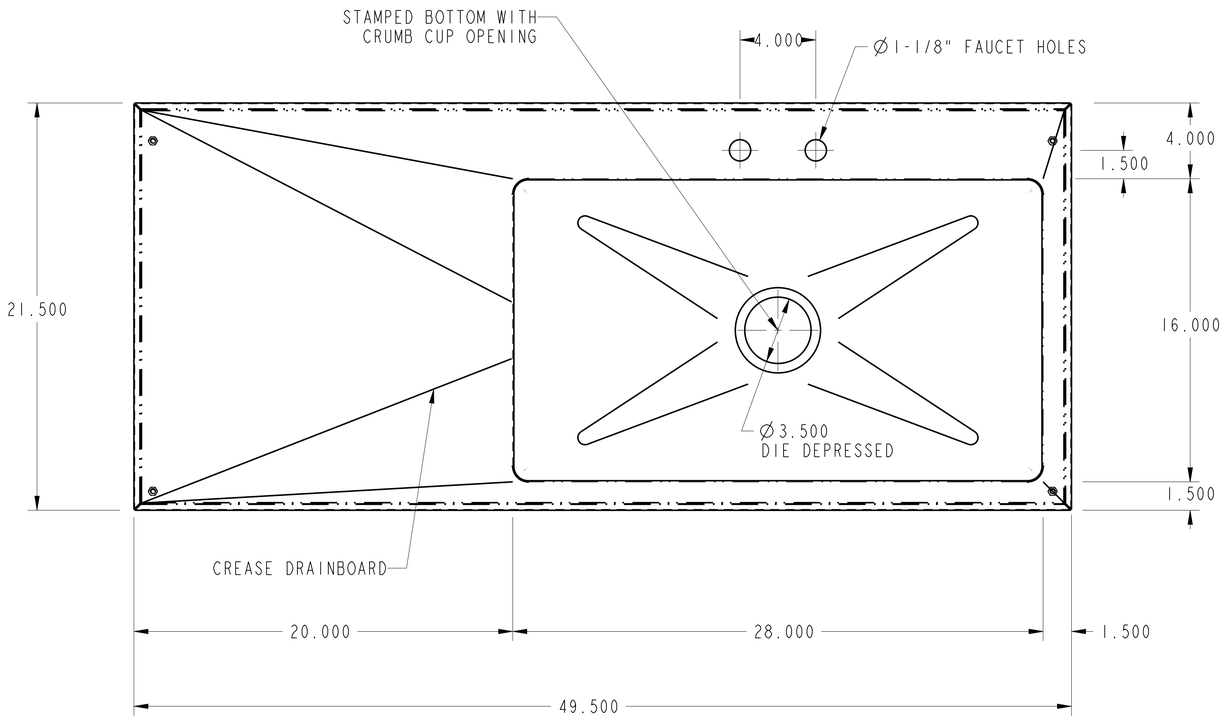

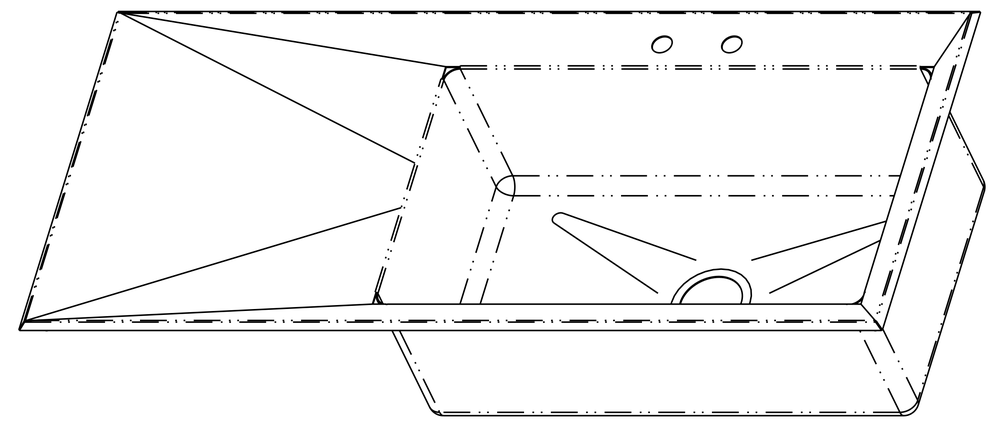

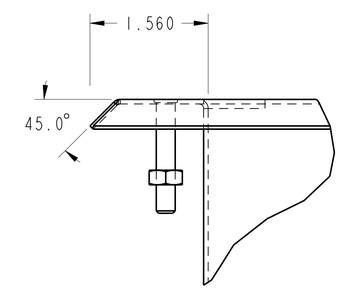

DETAIL A
SCALE 1.000

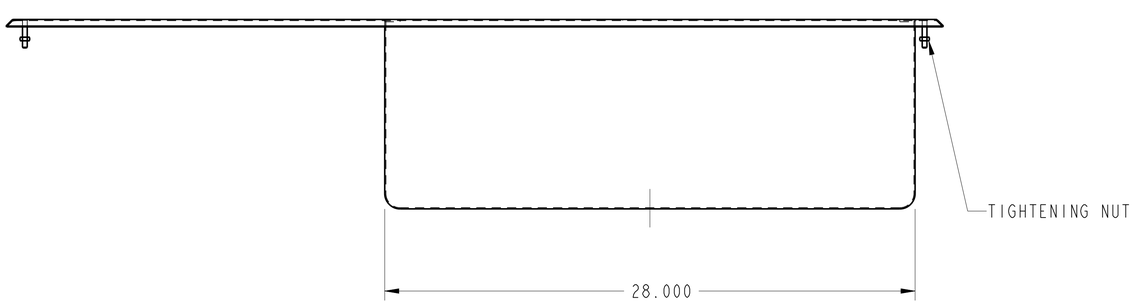

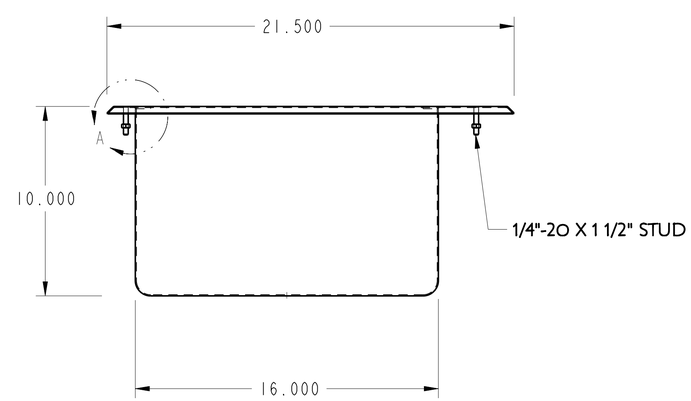

NO.	DATE		BY

REVISIONS

ASSEM	DWD-1-2816-10-20L

NSF PRO

THIS DRAWING IS THE PROPERTY OF AMTEKCO INDUSTRIES INC., AND IS TO REMAIN IN THE POSSESSION OF OUR REPRESENTATIVE UNLESS PERMISSION IS GIVEN BY AMTEKCO INDUSTRIES INC., AND MUST BE RETURNED WHEN REQUESTED.

AMTEKCO INDUSTRIES, INC.
MANUFACTURERS OF QUALITY PRODUCTS FOR THE FOOD MARKETING INDUSTRY
1205 REFUGEE ROAD COLUMBUS,OHIO 43207
(614)228-6590 Fax (614)737-8016

AMTEKCO INDUSTRIES

DROP-IN SINK W/DRAINBOARD (DWD-1-2816-10-20L)

APPROVED BY	CKD BY	DATE 28-Sep-06	SCALE 0.250
		DRAWN BY BALAJI	1 of 1
DATE	CODE	DRAWING No. DWD-1-2816-10-20L	REV. / PART/SHEET