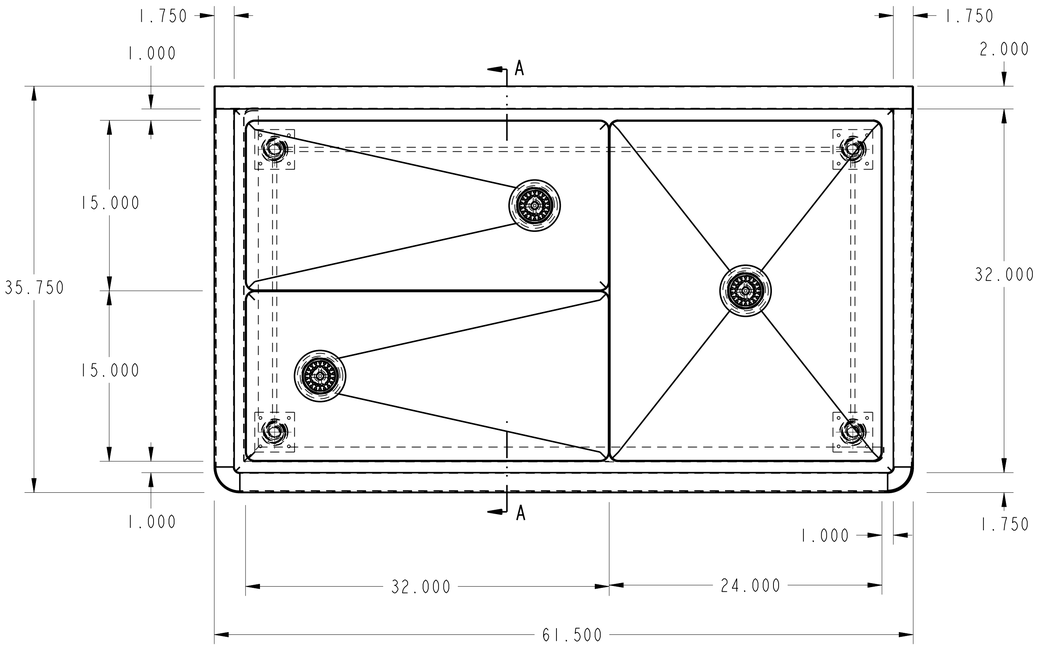

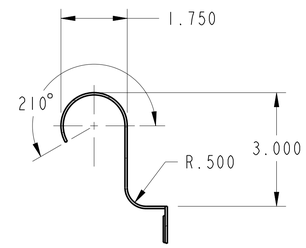

SECTION A-A
SCALE 0.500

PURCHASED ITEMS

KEY	DESCRIPTION	QTY.	U/M	INV. CODE	VENDOR NAME	PART/MODEL NUMBER	PART TYPE
1	DUO BASKET DRAIN, E38-1010	3	EA	B1	COMPONENT	E38-1010	ASSEMBLY
2	LEG GUSSET	4	EA	B1	COMPONENT	A18-0406	PART
3	S/S ADJUSTABLE BULLET FOOT	4	EA	B1	COMPONENT	A10-0851	PART

TOP: 16 GA. STN/STL ALL WELDED CONSTRUCTION w/ INTEGRAL 8" BACK. ALL HORIZONTAL AND VERTICAL CORNERS TO BE COVED TO A 1/2" RADIUS. SINKS TO BE WELDED INTEGRAL AS SHOWN.

SINKS: 16 GA. STN/STL ALL WELDED CONSTRUCTION. ALL INTERIOR CORNERS TO BE COVED TO A 3/4" RAD. WITH SPHERICAL INTERSECTIONS.

CROSSRAILS: 3/8" DIA. S/S FULLY WELDED TO LEGS

LEGS: 1 5/8" O.D. 16 GA. STN/STL TUBING HELD IN STN/STL LEG HOLDERS WHICH ARE FULLY WELDED TO REINFORCING PLATE ON UNDER SIDE OF SINK BOWLS.

FEET: STN/STL ADJUSTABLE BULLET TYPE.

NOTES: ALL STN/STL TO BE TYPE 300 SERIES.
ALL STN/STL TO BE POLISHED TO A NO. 5 FINISH.
ALL UNEXPOSED WELDS TO BE COVERED w/ ALUMINUM PAINT.
ALL METAL EDGES AND CORNERS TO BE FILED SMOOTH.

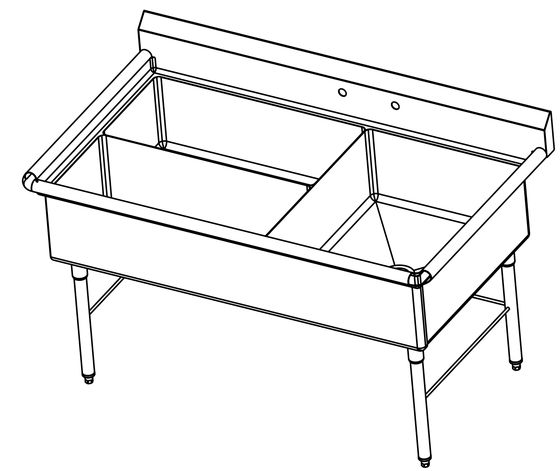

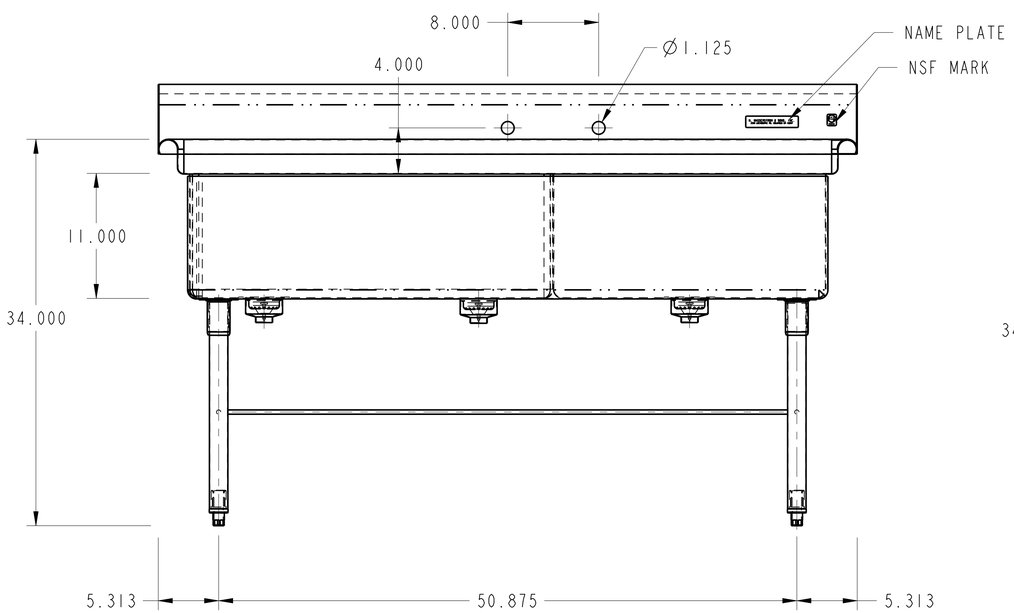

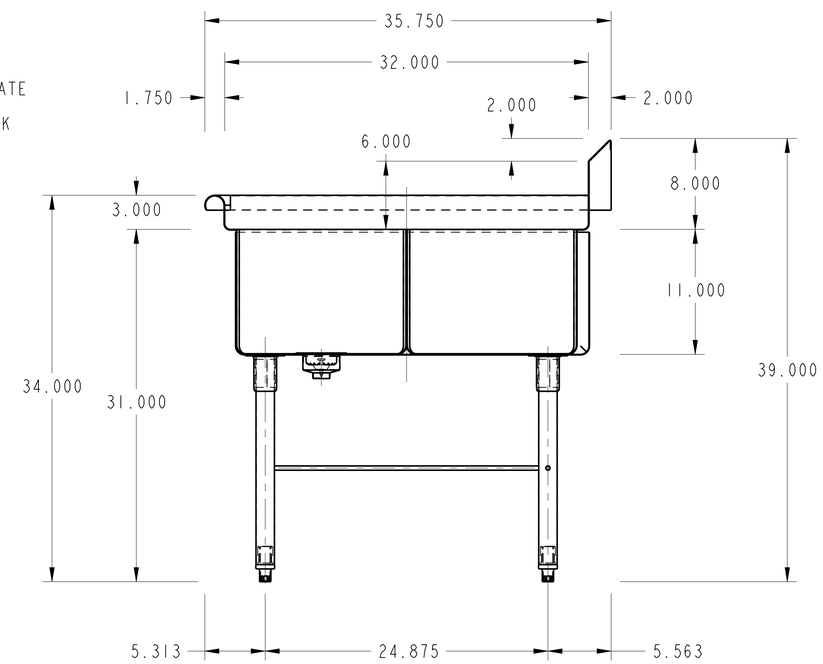

SECTION A-A

NO.	DATE	REVISIONS	BY

ASSEM P-3-2415

NSF PRO

THIS DRAWING IS THE PROPERTY OF AMTEKCO INDUSTRIES INC., AND IS TO REMAIN IN THE POSSESSION OF OUR REPRESENTATIVE UNLESS PERMISSION IS GIVEN BY AMTEKCO INDUSTRIES INC., AND MUST BE RETURNED WHEN REQUESTED.

AMTEKCO INDUSTRIES, INC.
MANUFACTURERS OF QUALITY PRODUCTS FOR THE FOOD MARKETING INDUSTRY
1205 REFUGEE ROAD COLUMBUS,OHIO 43207
(614)228-6590 Fax (614)737-8016

AMTEKCO

611/2" x 35 3/4" 3 COMP. SINK

APPROVED BY	CKD BY	DATE	SCALE
		04-Oct-06	0.150
		DRAWN BY MICKLE	1 of 1
DATE	CODE	DRAWING No. / REV. / PART/SHEET	
		P-3-2415	