URINAL: 16 GA. STN/STL ALL WELDED CONTRUCTION WITH INTEGRAL DEPRESSED DRAIN AS SHOWN.

BRACKET: 14 GA. STN/STL ALL WELDED CONSTRUCTION, STUD WELDED TO BOTTOM SURFACE.

NOTES: ALL STN\STL TO BE TYPE 300 SERIES.
ALL STN\STL TO BE POLISHED TO NO. 3 FINISH.
ALL UNEXPOSED WELDS TO BE COATED WITH ALUMINUM PAINT.
ALL METAL EDGES TO BE FILED SMOOTH. NO SHARP EDGES OR CORNERS.

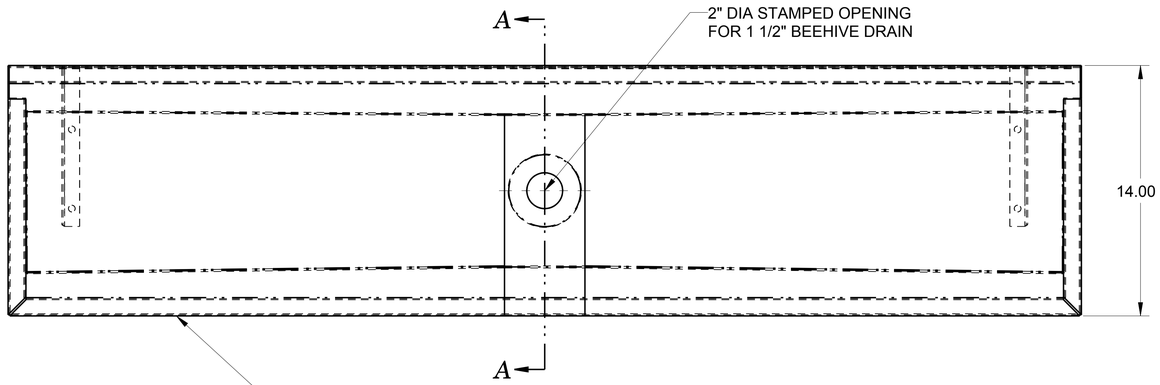

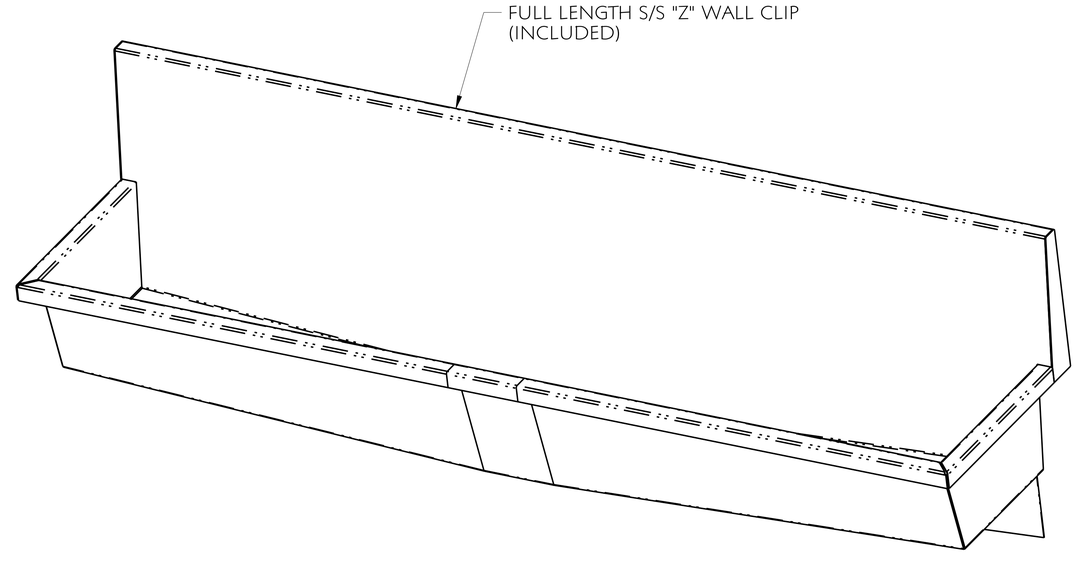

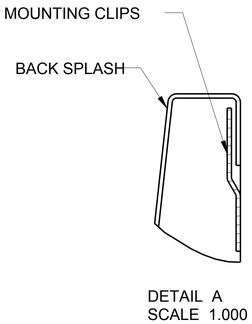

DETAIL A
SCALE 1.000

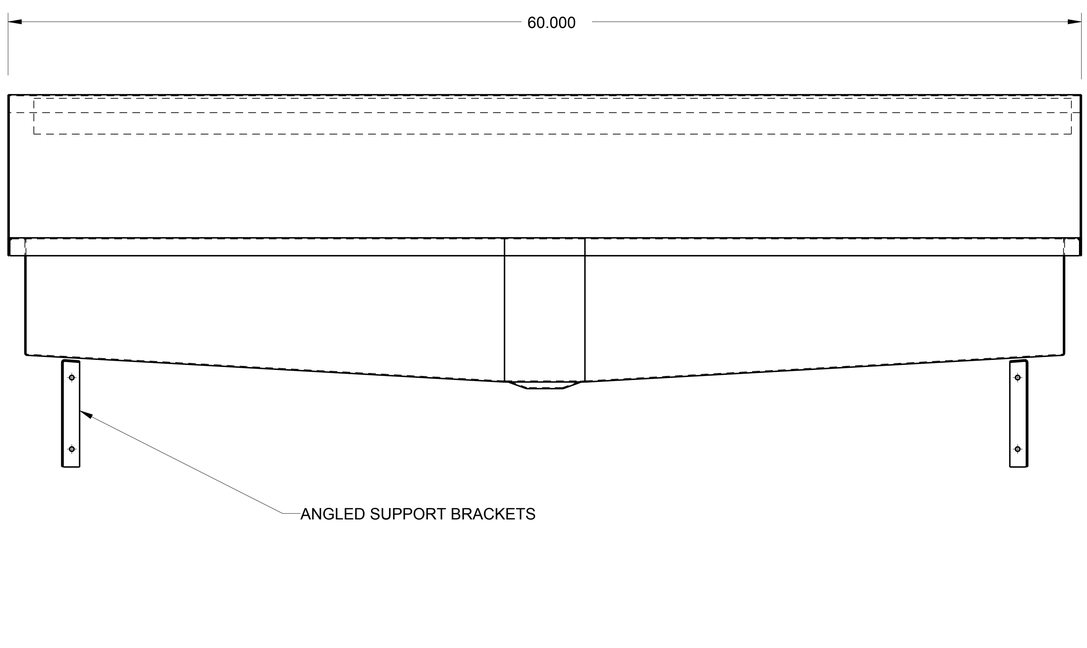

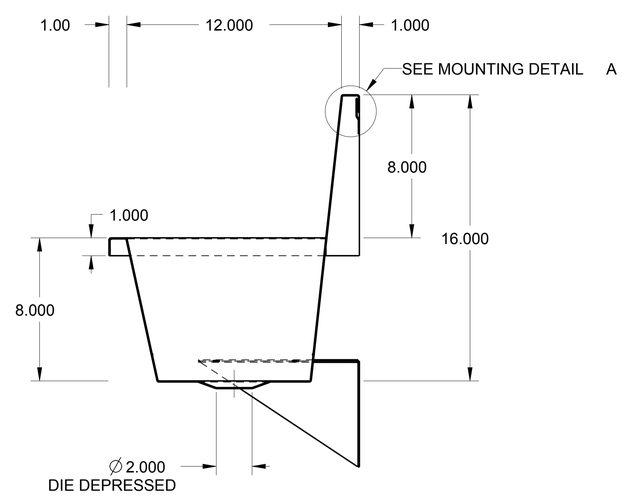

SECTION *A-A*

REVISIONS			
DATE	ENG.	REV#	REVISION
20-Sep-10	VS	02	URINAL SINK REMODELED

SUBMITTAL

THIS DRAWING MUST BE SIGNED AND RETURNED ALONG WITH ANSWERS TO ALL SUBMITTAL NOTES TO N. WASSERSTROM & SONS, INC. PRIOR TO BEING RELEASED FOR FABRICATION. APPROVAL OF THIS DRAWING IMPLIES THAT PURCHASER HAS REVIEWED ALL ASPECTS OF DRAWINGS INCLUDING SIZE, SHAPE, CONFIGURATION, COLORS, MATERIALS, MECHANICAL PROPERTIES, CONFORMITY TO LOCAL HEALTH & CONSTRUCTION CODES AND IS APPROVED

☐ APPROVED FOR FABRICATION ☐ APPROVED AS NOTED ☐ REVISE & RESUBMIT FOR APPROVAL

AUTHORIZED SIGNATURE ___/___/___ DATE

Account: AMTEKCO

Item Description: SSU-60 S/S URINAL

Sheet Description:

Item #	Job/Quote #	Scale:	Line#
		3" = 12"	

Engineer:	Drawing #	Sheet:	Subsheet:	Date:
VS	SSU-60	1	of 1	20-Sep-10

NSF

amtekco
A Wasserstrom Company
Manufacturers of Quality Products for the Food Marketing Industry
1205 Refugee Road, Columbus, Ohio 43207

THIS DRAWING IS THE PROPERTY OF N.WASSERSTROM & SONS INC. AND IS TO REMAIN IN THE POSSESSION OF OUR REPRESENTATIVE UNLESS PERMISSION IS GIVEN BY N.WASSERSTROM & SONS INC. AND MUST BE RETURNED WHEN REQUESTED.

(PROE)