URINAL: 16 GA. STN/STL ALL WELDED CONTRUCTION WITH INTEGRAL DEPRESSED DRAIN AS SHOWN.

BRACKET: 14 GA. STN/STL ALL WELDED CONSTRUCTION, STUD WELDED TO BOTTOM SURFACE.

NOTES: ALL STN \STL TO BE TYPE 304.
ALL STN \STL TO BE POLISHED TO NO. 3 FINISH.
ALL UNEXPOSED WELDS TO BE COATED WITH ALUMINUM PAINT.
ALL METAL EDGES TO BE FILED SMOOTH. NO SHARP EDGES OR CORNERS.

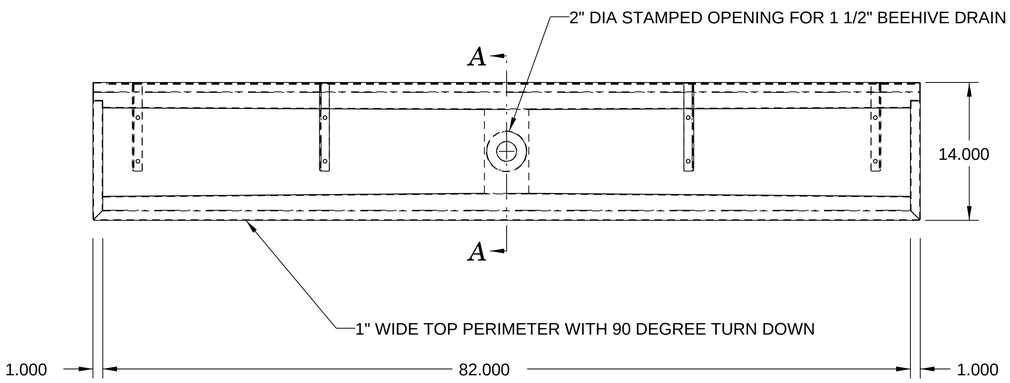

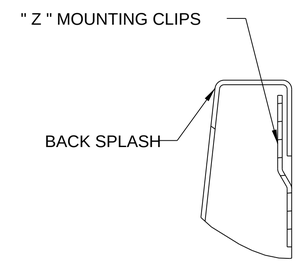

DETAIL A
SCALE 1.000

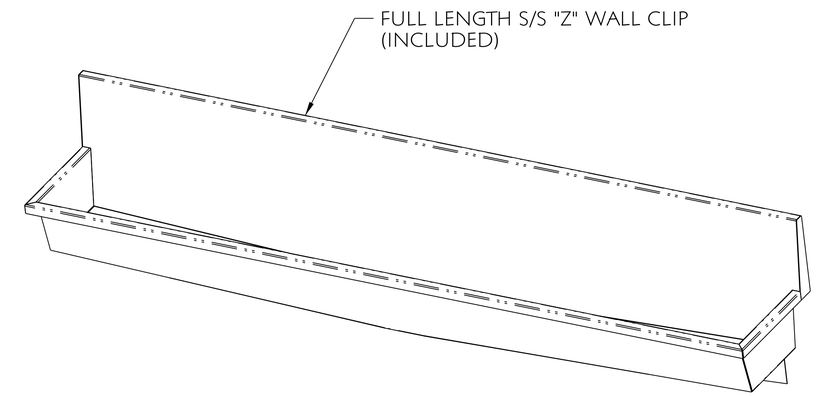

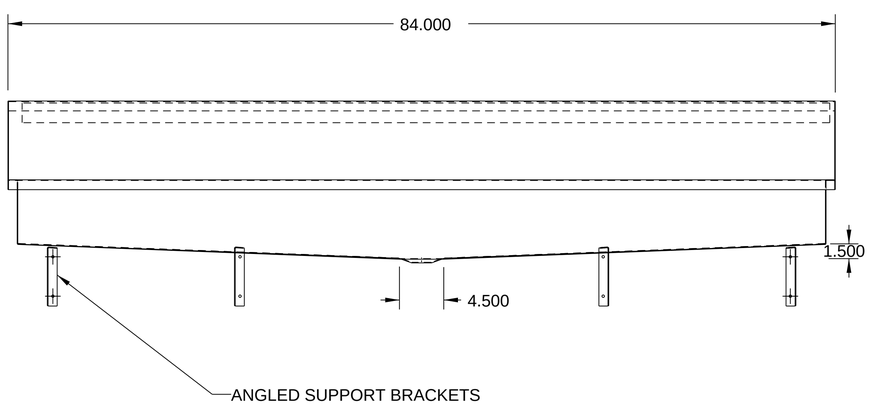

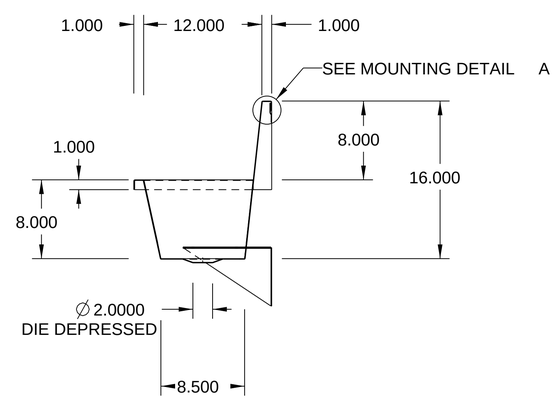

SECTION A-A

NO.	DATE		BY

REVISIONS

ASSEM	SSU-84

NSF PRO

THIS DRAWING IS THE PROPERTY OF AMTEKCO INDUSTRIES INC., AND IS TO RE MAIN IN THE POSSESSION OF OUR REPREBNTATIVE UNLESS PERMISSION IS GIVEN BY AMTEKCO INDUSTRIESINC., AND M UST BE RETURNED WHEN REQUESTED.

AMTEKCO INDUSTRIES, INC.
MANUFACTURERS OF QUALITY PRODUCTS FOR
THE FOOD MARKETING INDUSTRY
1205 REFUGEE RD. COLUMBUS,OHIO 43207
(614)228-6590 Fax (614)443-4807

AMTEKCO

SSU-84 S/S URINAL

APPROVED BY	CKD BY	DATE 14-Jun-06	SCALE 0.130
		DRAWN BY: GANESH	1 of 1
DATE	CODE	DRAWING No.	REV. / PART/SHEET
		SSU-84	