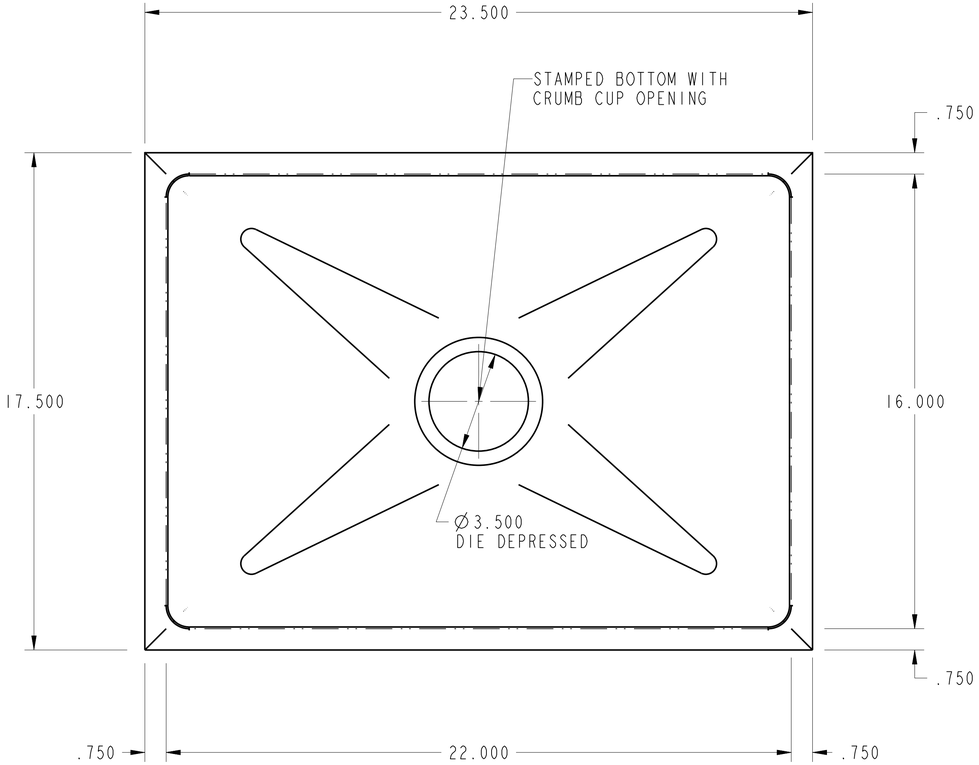

PURCHASED ITEMS							
KEY	DESCRIPTION	QTY.	U/M	INV. CODE	VENDOR NAME	PART/MODEL NUMBER	PART TYPE

DRP IN: 16 GA. STN/STL ALL WELDED CONSTRUCTION w/ INTEGRAL SINK. ALL HORIZONTAL AND VERTICAL CORNERS TO BE A 3/4" RADIUS.

NOTES:
ALL STN/STL TO BE TYPE 300 SERIES.
ALL STN/STL TO BE POLISHED TO A NO. 3 FINISH.
ALL UNEXPOSED WELDS TO BE COVERED w/ ALUMINUM PAINT.
ALL METAL EDGES AND CORNERS TO BE FILED SMOOTH.

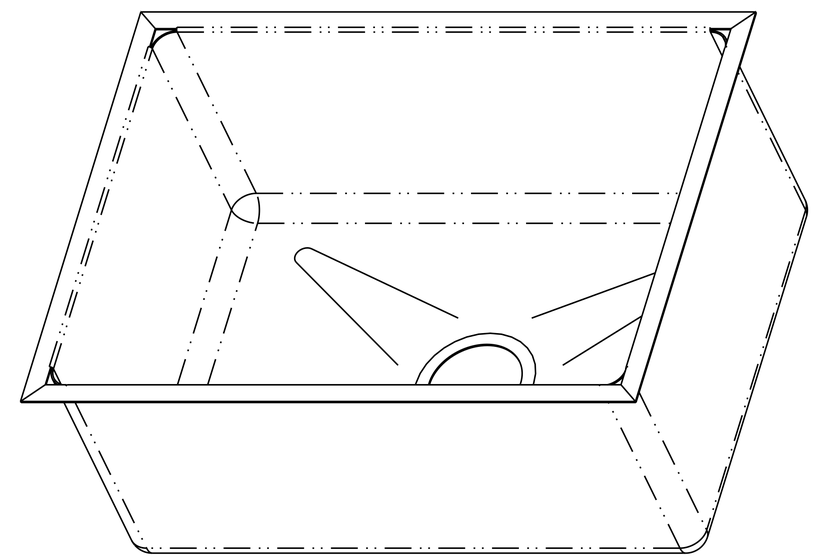

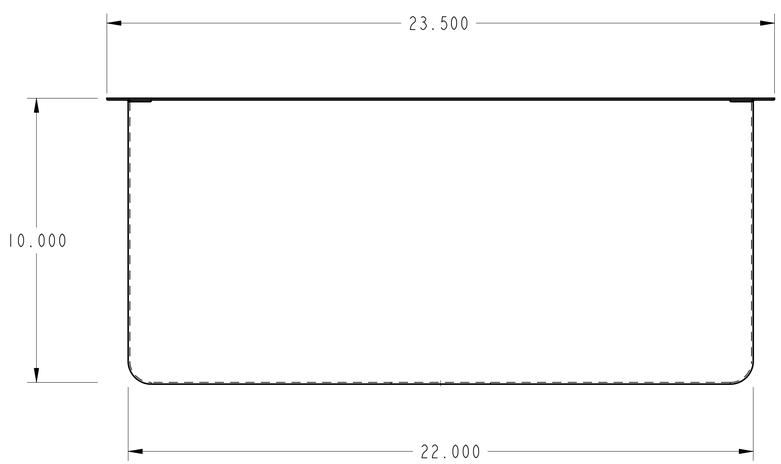

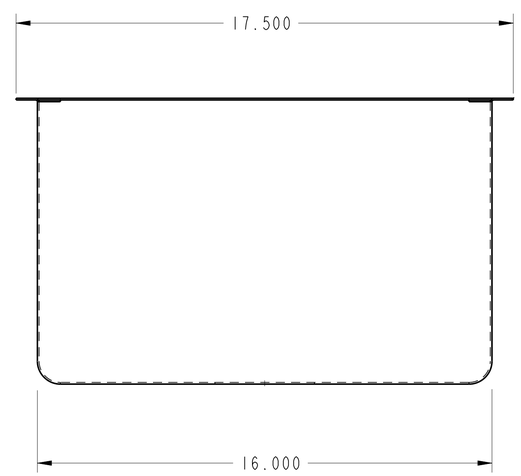

NO.	DATE		BY

REVISIONS

ASSEM	UM-1-2216-10

NSF

PRO

THIS DRAWING IS THE PROPERTY OF AMTEKCO INDUSTRIES INC., AND IS TO REMAIN IN THE POSSESSION OF OUR REPRESENTATIVE UNLESS PERMISSION IS GIVEN BY AMTEKCO INDUSTRIES INC., AND MUST BE RETURNED WHEN REQUESTED.

AMTEKCO INDUSTRIES, INC.
MANUFACTURERS OF QUALITY PRODUCTS FOR
THE FOOD MARKETING INDUSTRY
1205 REFUGEE ROAD COLUMBUS,OHIO 43207
(614)228-6590 Fax (614)737-8016

AMTEKCO INDUSTRIES

UNDERMOUNT SINK (UM-1-2216-10)

APPROVED BY	CKD BY	DATE 26-Sep-06	SCALE 0.375
		DRAWN BY BALAJI	1 of 1
DATE	CODE	DRAWING No. UM-1-2216-10	REV. / PART/SHEET