| PURCHASED ITEMS | | | | | | | |
|---|---|---|---|---|---|---|---|
| KEY | DESCRIPTION | QTY. | U/M | INV. CODE | VENDOR NAME | PART/MODEL NUMBER | PART TYPE |
| | | | | | | | |

DROP IN TOP : 16 GA. STN/STL ALL WELDED CONSTRUCTION.

SINK : 16 GA. STN/STL ALL WELDED CONSTRUCTION.
ALL HORIZONTAL AND VERTICAL CORNERS TO BE A 3/4" RADIUS.

NOTES:
ALL STN/STL TO BE TYPE 300 SERIES.
ALL STN/STL TO BE POLISHED TO A NO. 3 FINISH.
ALL UNEXPOSED WELDS TO BE COVERED w/ ALUMINUM PAINT.
ALL METAL EDGES AND CORNERS TO BE FILED SMOOTH.

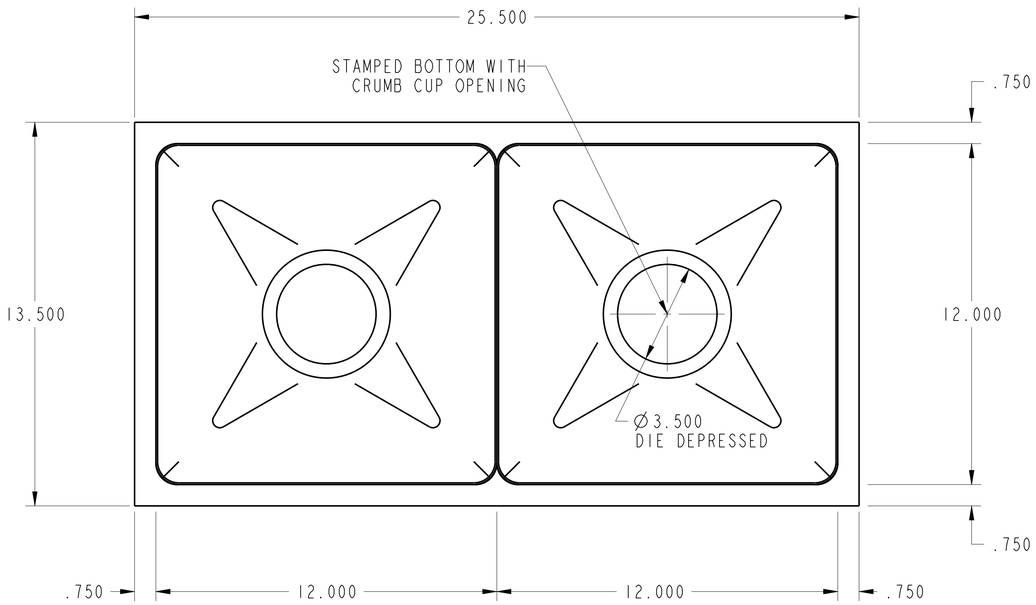


PLAN VIEW

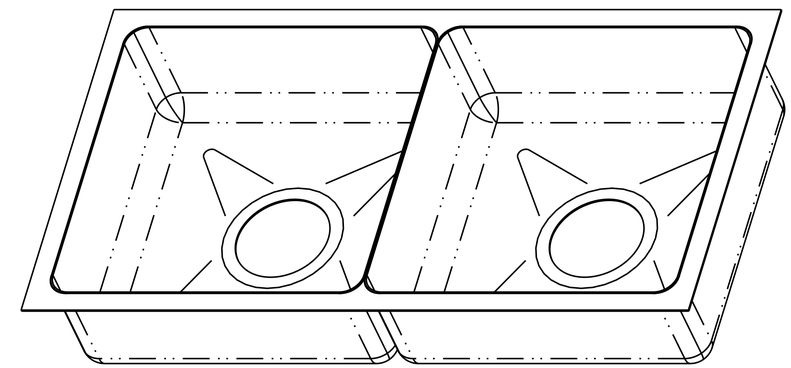

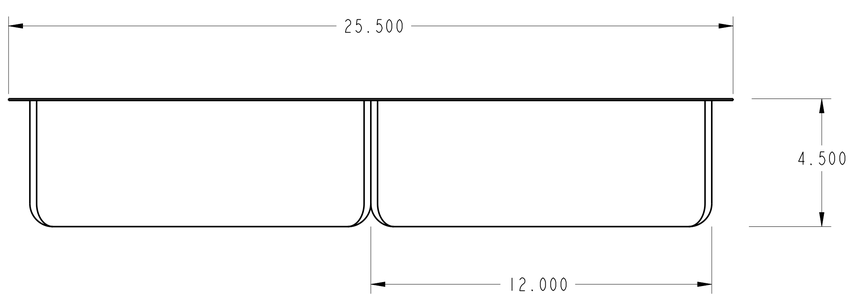


FRONT ELEVATION

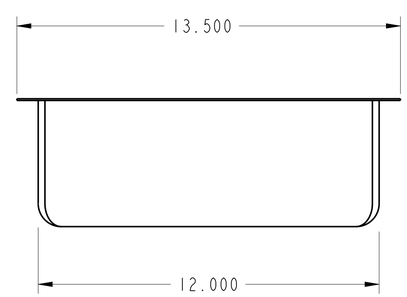


| NO. | DATE | | BY |
|---|---|---|---|
| | | | |

REVISIONS

| ASSEM | UM-2-1212-4_5 |
|---|---|

NSF PRO

THIS DRAWING IS THE PROPERTY OF AMTEKCO INDUSTRIES INC., AND IS TO REMAIN IN THE POSSESSION OF OUR REPRESENTATIVE UNLESS PERMISSION IS GIVEN BY AMTEKCO INDUSTRIES INC., AND MUST BE RETURNED WHEN REQUESTED.

AMTEKCO INDUSTRIES, INC.
MANUFACTURERS OF QUALITY PRODUCTS FOR
THE FOOD MARKETING INDUSTRY
1205 REFUGEE ROAD COLUMBUS,OHIO 43207
(614)228-6590 Fax (614)737-8016

# AMTEKCO INDUSTRIES

## TWO COMPARTMENT UNDERMOUNT SINK (UM-2-1212-4.5)

| APPROVED BY | CKD BY | DATE 04-Oct-06 | SCALE 0.375 |
|---|---|---|---|
| | | DRAWN BY BALAJI | 1 of 1 |
| DATE | CODE | DRAWING No. UM-2-1212-4.5 | REV. / PART/SHEET |